SENSOR

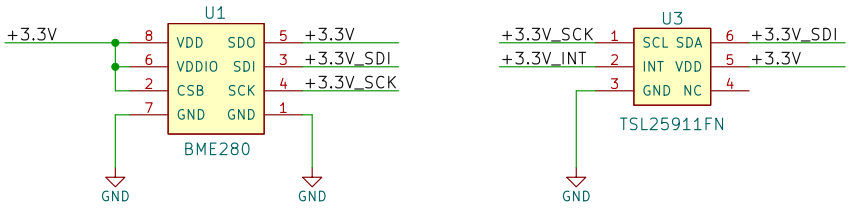

VOLTAGE REGULATOR

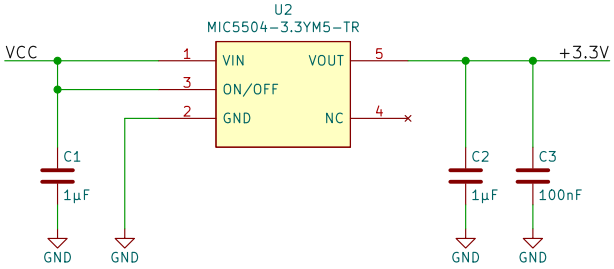

BIDIRECTIONAL LOGIC LEVEL CONVERTER

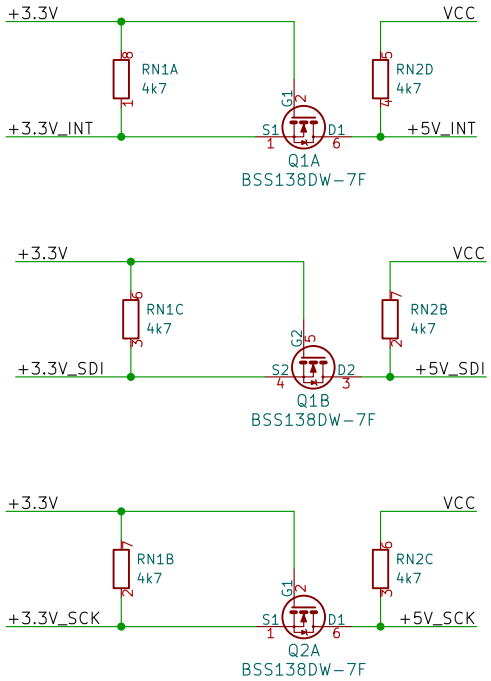

NOTES

1. TSL25911 Light Sensor can only use the I2C bus (Adress 0x29).

2. BME280 Sensor is hard-wired to use the I2C bus (Adress 0x77).

3. SPI Communication for the BME280 is not available on this board.

4. Interrupt signal from TSL25911 is routed directly to INT pin.

5. Power Supply can operate with 3.3V or 5V on VCC Pin.

6. Mounting Holes (2.8mm) are designed for M2.5 Screws (ISO metric).

BILL OF MATERIALS

1.	C1	–	LMK107B7105KA-T
2.	C2	–	LMK107B7105KA-T
3.	C3	–	CL10B104KO8NNNC
4.	RN1	–	EXB-38V472JV
5.	RN2	–	EXB-38V472JV
6.	Q1	–	BSS138DW-7-F
7.	Q2	–	BSS138DW-7-F
8.	U1	–	BME280
9.	U2	–	MIC5504-3.3YM5-TR
10.	U3	–	TSL25911FN
11.	J1	–	S1011EC-40-ND

HEADER

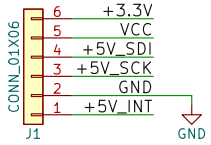

Sheet: /
File: BME280+TSL2591_V3.kicad_sch

Title: BME280+TSL2591 Advanced Weather Station

Size: A4	Date: 2023-07-23	Rev: 3.00
KiCad E.D.A. kicad (6.0.8)		Id: 1/1