SENSOR

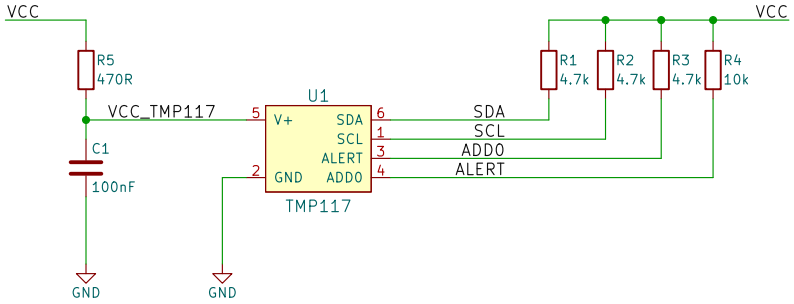

NOTES

1. For Default I2C Address (0x49), leave ADD0 Pin unconnected.
For the first alternative I2C address (0x48), connect ADD0 Pin to GND.
For the second alternative I2C address (0x4A), connect ADD0 Pin to SDA.
For the third alternative I2C address (0x4B), onnect ADD0 Pin to SCL.

2. The sensor can operate with 3.3V or 5V on VCC Pin.

3. Mounting Holes (2.8mm) are designed for M2.5 Screws (ISO metric).

4. The Thermal Pad under the TMP117 was left unsoldered and electrically unconnected.

BILL OF MATERIALS

1.	C1	–	CL10B104KO8NNNC
2.	R1	–	RC0603FR-074K7L
3.	R2	–	RC0603FR-074K7L
4.	R3	–	RC0603FR-074K7L
5.	R4	–	RC0603FR-0710KL
6.	R5	–	AC0603JR-07470RL
7.	U1	–	TMP117NAIDRVR
8.	J1	–	S1011EC-40-ND

HEADER

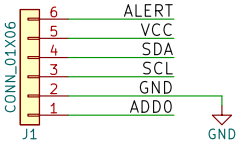

BlueDot

Sheet: /
File: TMP117_V2.kicad_sch

Title: TMP117 High Accuracy Temperature Sensor

Size: A4	Date: 2023-07-23	**Rev: 2.00**
KiCad E.D.A. kicad (6.0.8)		Id: 1/1